MobiCom: U: Going Beyond Backscatter

Moteen Shah
VJTI, Mumbai
mashah_b20@et.vjti.ac.in

Adithya Bijoy
IIT, Delhi
cs1210571@iitd.ac.in

Mentor: Ambuj Varshney
National University of Singapore
ambujv@nus.edu.sg

ABSTRACT

There is a stark disparity in the energy consumption for performing wireless transmissions and sensing/processing tasks in wireless embedded systems. The result is a dependence of these embedded devices on bulky batteries, which also last for a short period of time. To tackle this research challenge, we present our preliminary work to design a novel transmitter that enables transmissions at a similar energy consumption as other operations in wireless embedded systems. This transmitter exploits the capability of tunnel diode oscillators to function as a self-oscillating mixers. We build on this property to design a transmitter that generates frequency-modulated transmissions at a peak power of well below 100 microwatts. Nevertheless, the transmitter trades off the stability of the carrier signal for low power; thus we implement error correction codes to increase reliability. Our experiments demonstrate the potential of our transmitter to support short-range transmissions with low power consumption.

1 INTRODUCTION

Over the years, wireless embedded systems (WES) have experienced remarkable growth, with millions of devices deployed globally. However, a major obstacle to this growth is the energy challenge, which refers to the significant difference in power consumption between wireless communication and other tasks in WES [8]. This challenge leads to frequent battery replacements that can be very burdensome, considering the enormous scale of deployment, and limits the design possibilities for compact forms like stickers.

Conventional transmitters that support standards like bluetooth low energy(BLE), ZigBee, and WiFi consume power in tens of milliwatts [3, 5], far higher than sensors, such as those tracking motion and temperature measurements that require only a few microwatts. To understand the reasons for this stark difference, we need to examine the architecture of a transmitter. It can be broadly divided into analog and digital circuit blocks.

The analog block comprises oscillators, mixers, and amplifiers and generates RF carrier signals. On the other hand, the digital block generates a baseband signal, which modulates an RF carrier signal produced by analog circuits. Over time, the digital circuits in radio transmitters have become exceedingly energy-efficient due to Moore's law. However, we have yet to see similar improvements in circuits comprising the analog block, which results in significant power consumption associated with the radio transmitter.

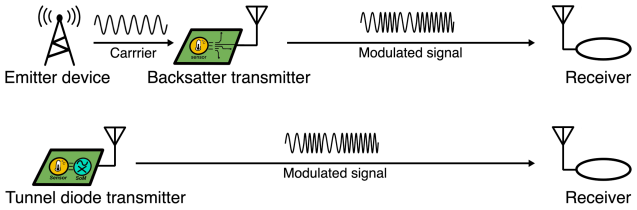

Figure 1: *Transmitter overview.* Unlike backscatter transmitters, our transmitter does not depend on an external carrier-emitting device. It generates a carrier signal and modulates it. Despite this, the power consumption of our transmitter remains comparable to that of a backscatter transmitter, operating at approximately tens of microwatts.

Backscatter communication. One promising solution to the energy challenge is the backscatter mechanism [5]. This mechanism decouples the energy-intensive analog tasks from the transmitter and delegates them to an externally powered infrastructure, such as an edge device. They generate high-frequency carrier signals. Next, the backscatter transmitter only performs digital baseband operations. It alters the state of an antenna to reflect or absorb this carrier signal to modulate it with baseband information, thereby generating reflections that constitute the transmissions. In this manner, backscatter transmitters can even generate wireless transmissions that are compatible with commodity standards while consuming tens of microwatts of power [3, 5].

Despite the potential and at least a decade of sustained research efforts, backscatter transmitters have had little impact on real-world deployments. We believe that the primary reason for the lack of adoption of backscatter transmitters is the strong dependence on an emitter device that provides the necessary carrier signal to support backscatter transmissions [7, 8]. In most backscatter deployments, the emitter device has to generate a strong carrier signal, and has to be located in the proximity (within a few meters) of the backscatter transmitter to achieve link metrics that outperform commercial transmitters [1, 3]. This limits the practical usefulness of the backscatter transmitters. Thus, there is a need to rethink low-power transmitters and go beyond the backscatter as a de-facto solution to the energy challenge.

Going beyond backscatter. One emerging solution beyond the backscatter mechanism is rethinking the analog circuits

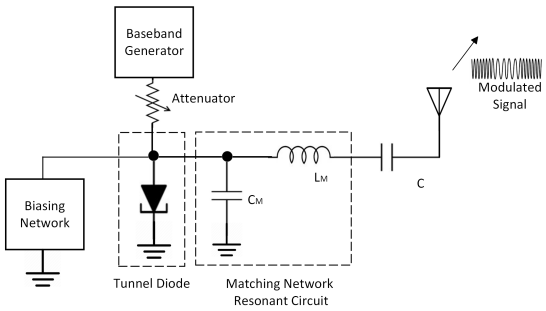

Figure 2: *Transmitter schematic.* The tunnel diode is biased in its RNR through a biasing circuit. It is coupled to a resonant circuit to ensure carrier signal generation in the 868 MHz band. The baseband signal is attenuated and mixed with the carrier signal generated by TDO using the SoM property of the TDO.

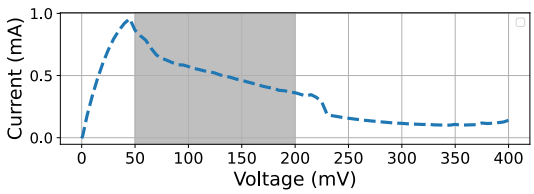

Figure 3: *I-V characteristics.* As we increase the bias voltage across the tunnel diode (1N3712), the current through the diode begins to drop (after a threshold voltage), thereby demonstrating a region of negative resistance. We represent this region with the shaded portion in the graph.

to lower the power consumption. These beyond-backscatter transmitters generate and modulate a carrier signal with baseband information [2, 4, 6, 8], which is similar to traditional transmitters. However, they make inevitable trade-offs in signal strength and oscillator stability that allow this task to be accomplished within the power budget of a typical backscatter transmitter or just slightly more. In particular, they take advantage of advances in the receiver's capabilities, particularly their ability to tackle noisy oscillators at the transmitter and achieve high receiver sensitivity. Consequently, like conventional radio transmitters, they require only two devices and eliminate the need for a carrier emitter, as depicted in Figure 1. Thus, this greatly simplifies application deployments.

Varshney et al. [8] show that tunnel diodes can enable the design of a low-power tunnel diode oscillator (TDO). TDO enables RF carrier signal generation at under 100 microwatts of power. We build on the Judo transmitter in this work.

Tunnel diode transmitter. Tunnel diodes exhibit negative resistance and can be paired with a resonant circuit to generate oscillations. By leveraging this property, we develop a low-power TDO that generates a carrier signal using less than 100 microwatts of power. The generation of a carrier signal usually represents the most power-intensive task in a radio transmitter, which typically for calls for RF mixers for modulation with the baseband signal. In this regard, we take inspiration from Judo [8], utilizing the self-oscillating mixing (SoM) property of the TDO to mix the baseband signal with the locally generated carrier signal.

We must make tradeoffs to reduce power consumption. The TDO, for example, is noisy and presents stability challenges. To address these issues, we explore using signal spreading and error correction codes in this work. Specifically, we implement Reed Solomon codes in combination with a convolutional encoder. Our early experiment demonstrates that this approach can result in communication with zero-bit errors under specific conditions, thereby mirroring the capabilities of much more power-hungry transmitters.

We present early results. We believe they hold promise and can pave the way beyond backscatter as a de-facto mechanism for low-power transmissions in WES.

2 RELATED WORK

Judo[8]: The paper introduces Judo, a low-power wireless transmitter utilizing tunnel diode oscillators (TDOs), achieving a range over 100 meters with peak power consumption below 100 µW. It explores Judo's performance in dynamic environments, particularly when injection-locked to an external carrier signal, showing enhanced stability. Compared to short-range transmitters, Judo excels due to high receiver sensitivity and sub-GHz frequencies but lags behind long-range transmitters. Challenges with tunnel diode availability are noted, with future research directions including backscatter modules and reliability enhancements. The study concludes by highlighting Judo's architecture, its impact on power consumption, performance relative to common transmitters, and the availability of source code and design files.

TunnelEmitter[7]: This paper discusses the development of Tunnel Emitter, a low-power carrier emitter for backscatter tags. The study found that backscatter tags achieve transmissions at orders of magnitude lower energy consumption when compared to conventional radio transmitters. Backscatter systems comprise an emitter device to generate a carrier signal, a tag that reflects or absorbs this signal, and an edge device (receiver) to receive these reflections. Traditional backscatter systems demonstrate that the task of carrier generation is power-consuming. Tunnel Emitter focuses on enabling this task of generating carrier signals at a peak biasing power of tens of µW. This makes it capable of running on harvested energy from the environment and, thus, enabling battery-free emitter devices. The study also evaluated potential use cases in scenarios such as smart factories, smart contact lenses, and healthcare applications, showcasing the significant impact of the low-power and back injection capabilities of Tunnel Emitter.

Self-oscillating mixer (SoM): The discovery of a single circuit able to perform both signal generation and mixing

dates back to 1915. Armstrong demonstrated several functions, such as local oscillation and frequency conversion, in a single circuit for audio reception. Efforts have been made to integrate SoM with an antenna to enable compact designs. When a single device generates and mixes carrier signals, cost, complexity, and power consumption are reduced. Judo is the first to demonstrate the feasibility of low-power transmission using tunnel diode SoMs.

LoRea[5]: The paper discusses the challenges in the widespread adoption of Computational RFID (CRFID) platforms, including their low communication range, low throughput, and expensive infrastructure, which has hindered their widespread adoption. The paper presents LoRea, a backscatter reader that achieves higher range and lower cost compared to existing CRFID readers. LoRea achieves this by diverging from existing designs of CRFID readers and more specifically, how self-interference is tackled. The paper provides experimental evaluations showing that LoRea outperforms state-of-the-art backscatter systems and CRFID platforms. It also discusses the potential applications of LoRea, such as battery-free light sensors and mobile backscatter readers. Additionally, the paper discusses the design choices and contributions of LoRea, highlighting its lower cost and higher range compared to existing readers. The experimental results and comparisons with existing systems demonstrate the effectiveness and potential of LoRea in overcoming the limitations of current CRFID platforms.

3 DESIGN

3.1 Transmitter

Tunnel diode oscillator. Tunnel diodes are semiconductor devices that show regions of negative resistance (RNR). In particular, the RNR occurs at tens of millivolts and a peak current consumption of a few milli-amperes. Consequently, tunnel diodes require a biasing power of only tens of microwatts. In this work, we use a tunnel diode, GE 1N3712, whose IV characteristics are shown in Figure 3. The biasing power is well below 100 microwatts. We couple this tunnel diode with a resonant circuit to design a TDO that generates a carrier signal with the frequency in the 868 MHz band.

Baseband Generation. We use the ESP32 with the ESP-IDF framework. We use the LEDC (LED Controller) module to generate pulse width modulation (PWM) signals, thereby enabling the generation of digital baseband signals through an external GPIO pin. The baseband generator leverages FreeRTOS for task scheduling and inter-task communication. At the core, we have two key tasks: *Packet Task* and *Timer*. The *Packet Task* generates packets containing header and payload data and periodical transmission of packets. Internally, it utilizes a queue to store the packet data's binary representation. The *Timer* task operates along an ESP timer, invoking the *Timer Callback* function at regular intervals. It retrieves the data from the queue and controls the PWM frequency and GPIO logic level to transmit the binary data.

Modulation. We use the frequency shift keying (FSK) modulation scheme. We generate the two frequencies of 220KHz and 180KHz. This corresponds to a deviation of 40 KHz, and an intermediate frequency of 200 KHz.

Enhancing reliability. Our experiments employed convolutional codes with a code rate of 1/2 and a constraint length of 7. For decoding, we use the receiver's built-in veterbi decoder. Despite utilising convolutional codes, we found packet loss and burst errors. To handle this, we leverage Reed-Solomon codes, interleaving, and convolutional codes.

3.2 Receiver

We use high-sensitivity receivers in our system to tackle the challenge of the relatively weaker signal strength of the transmitter. Specifically, we use the Texas Instruments CC1310 transceiver. It can operate with narrow bandwidths and can also utilize signal-spreading techniques. Moreover, it increase receiver sensitivity and the link budget, thereby extending the communication range. This receiver can also offset a few frequency drifts from the TDO, thereby enhancing link reliability.

3.3 Power consumption

Energy efficiency is a paramount concern in embedded system design, and the selection of the microcontroller plays a crucial role. We modify the system with state-of-the-art low-power microcontroller from Texas Instruments MSP430. The MSP430 consumes about 800 microwatts at a CPU frequency of 6.67 MHz during baseband generation, significantly contributing to the system's overall power efficiency.

4 UNIQUENESS OF THE APPROACH

Going Beyond Backscatter explores a novel application for tunnel diodes (TDs), a technology primarily relegated to niche applications since their invention in the mid-20th century. TDs possess the intriguing characteristic of negative differential resistance (NDR) due to the quantum mechanical phenomenon of tunneling. Initially envisioned as high-frequency transistor replacements, limitations like a narrow operating window and temperature sensitivity hampered their widespread adoption. Mainstream electronics gravitated towards more versatile solutions like bipolar junction transistors (BJTs) and metal-oxide-semiconductor field-effect transistors (MOSFETs). This project, however, capitalizes on these very characteristics of TDs – their exceptional high-frequency response and NDR – to design a transmitter with a power consumption below 100 microwatts. Such a device

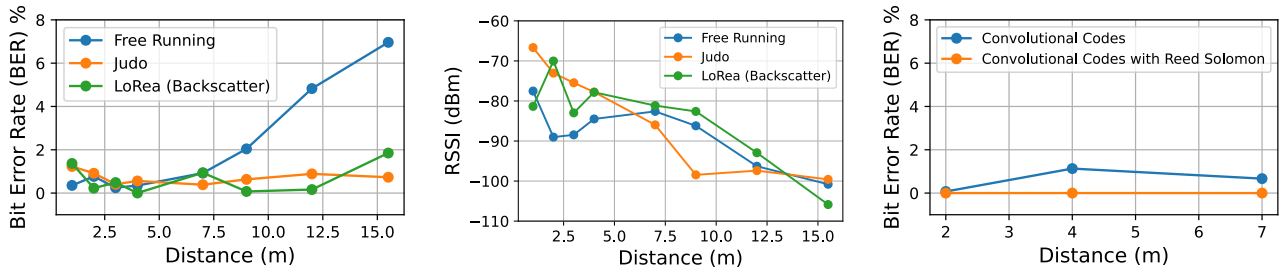

(a) (b) (c)

Figure 4: (a) Link metrics as measured by BER for the proposed transmitter (free running TDO), Judo, and Backscatter (LoRea) transmitter with varied distances; (b) received signal strength (RSSI) variation with distance; (c) impact of Reed Solomon(block error correcting code) on BER for the proposed transmitter. Employing error correcting codes leads to significant improvement in link reliability.

has the potential to significantly reduce the burden of frequent battery replacements and potentially operate solely on harvested energy.

5 RESULTS AND EVALUATION

Setup. We conducted experiments in a university building. It is a complex radio environment with walls, furniture, and students sitting at their desks. We positioned the transmitter on a wooden cabinet, one meter above the ground. We employed omnidirectional antennas with 2dB gain. For performing the experiment with a Judo/backscatter transmitter, we generated a carrier signal using a software defined radio, USRP B-200.

We configured the transmitter to a bitrate of 5 kilobauds (before coding and spreading), encoded with convolutional code (with code rate 1/2 and constraint length 7) and spread using the direct sequence spread spectrum (with spread factor 2). We calculated the link metrics by sending 80-byte packets with a fixed payload. We perform two instances of experiments at each location. In each instance of the experiment, we collect over 1000 packets. We disable CRC checks and do not send checksum bytes. It permits packets with corrupt bits to be received, which the receiver would otherwise discard. We evaluate the received packets and compare them to the baseline sequence to calculate the bit error rate (BER).

Without coding. We evaluated the ability of the transmitter to communicate over short distances without employing any error correcting or spreading codes. We compared the transmitter to Judo and backscatter (LoRea) transmitter. Figure 4a reveals that BER increases with distance from the transmitter. Furthermore, the BER for the proposed transmitter is much higher than that for Judo and LoRea. This is expected owing to the noisy nature of the TDO.

With coding. We examine improving link reliability by employing an error-correcting code. In particular, we implement Reed Solomon codes (block error correcting code). Figure 4c depicts the comparison of BER with the proposed transmitter (free running) with/without block error correcting codes. We observed a significant improvement in reliability. In particular, convolutional codes do not correct burst errors and packet losses caused by the drift in TDO frequency. We employ Reed Solomon codes with interleaving in addition to convolutional codes particularly to correct errors caused due to this aspect. However, we observed that Reed Solomon does not work effectively when packet losses exceed 8%.

Conclusion. Here we introduced our work on designing a transmitter that overcomes the limitation of backscatter. The transmitter employs tunnel diodes to design a highly energy-efficient RF oscillator. However, it comes with trade-offs in stability and phase noise. To mitigate these constraints, we explored using ECC and shared promising initial results.

REFERENCES

[1] Ensworth et al. 2017. BLE-backscatter: Ultralow-power IoT nodes compatible with Bluetooth 4.0 low energy (BLE) smartphones and tablets. *IEEE T-MTT* 65, 9 (2017), 3360–3368.

[2] Z. Renjie et. al. [n. d.]. SlimWiFi: Ultra-Low-Power IoT Radio Architecture Enabled by Asymmetric Communication. In *USENIX NSDI 23.*

[3] B. Kellogg et. al. 2016. Passive Wi-Fi: Bringing Low Power to Wi-Fi Transmissions. In *USENIX NSDI'16.* USENIX Association, 151–164.

[4] A. Kupferman, S.; Yehezkely. 2020. Low energy transmitter. US Patent 10,769,511.

[5] V. Talla at. al. 2017. LoRa Backscatter: Enabling The Vision of Ubiquitous Connectivity. *ACM IMWUT* (2017), 105:1–105:24.

[6] A. Varshney et. al. 2019. TunnelScatter: Low Power Communication for Sensor Tags Using Tunnel Diodes. In *ACM MobiCom '19.*

[7] A. Varshney et. al. 2020. Tunnel emitter: Tunnel diode based low-power carrier emitters for backscatter tags. In *ACM MobiCom'20.* 1–14.

[8] A. Varshney et. al. 2022. Judo: Addressing the energy asymmetry of wireless embedded systems through tunnel diode based wireless transmitters. In *ACM MobiSys'22.*